MERCRUISER (4.3L (GEN II) (2 BBL.) GM 262 V-6 1992-1993)
Serial Nbr Range: 0D714107 THRU 0F000877 ()

STARTER MOTOR AND ALTERNATOR

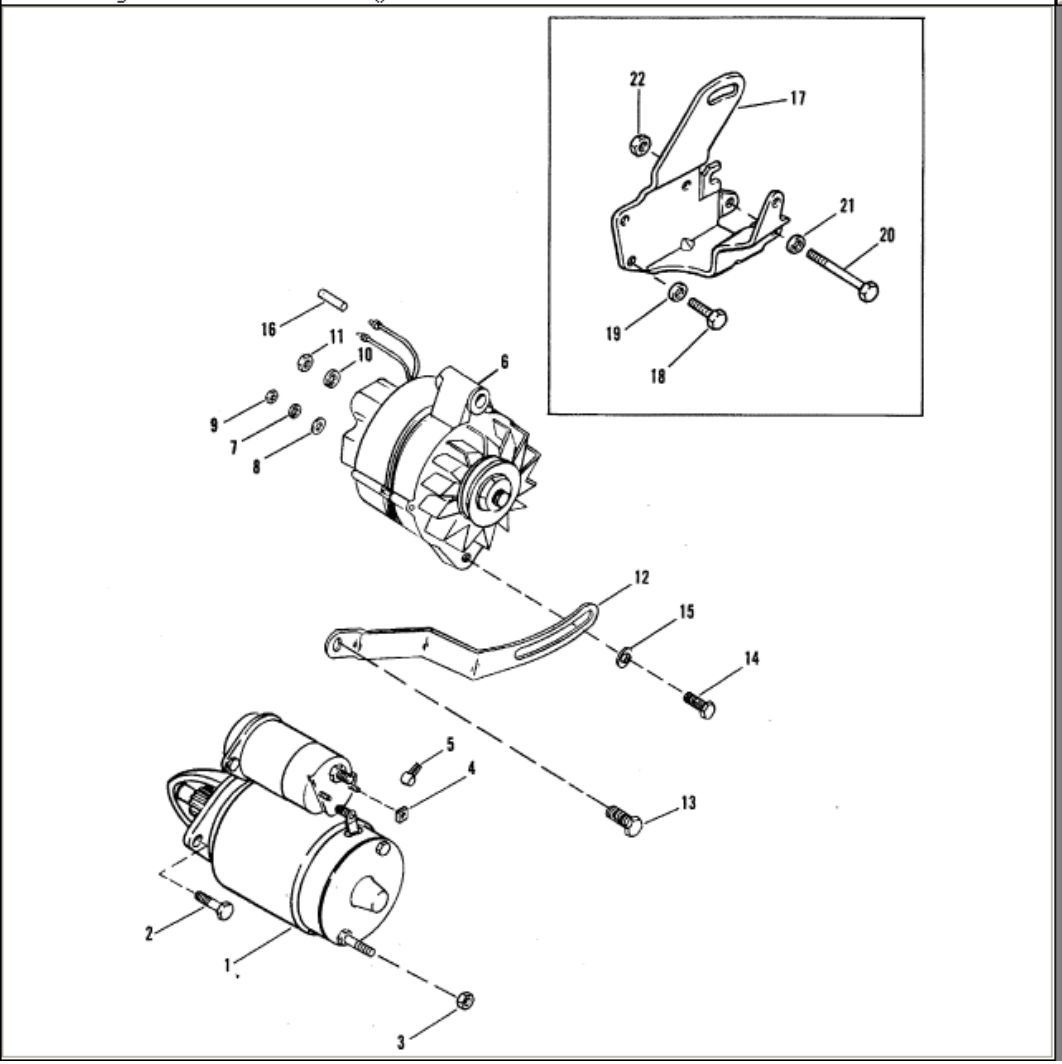

Parts List

Ref	Class	Part	Description	Qty	Comment	Footnote
1	50	812604A 2	STARTER MOTOR	1		
2	10	813642	SCREW	2		
3	11	15874	NUT (10MM)	1		
4	11	40021 1	NUT (5MM)	2		
5	85	79695	INSULATOR	1		
6		817119A 1	ALTERNATOR	1		
7	13	26996	LOCKWASHER	1		
8	12	96457	WASHER	1		
9	11	79989	NUT (10-24)	1		
10	13	21272	LOCKWASHER	1		
11	11	64015	NUT (1/4-20)	1		
12		85013T	BRACE	1		
13	10	98261	SCREW	1		
14	10	29198	SCREW	1		
15	12	26168	WASHER	1		
16		57908 11	TUBING	2		
17		15083T	BRACKET	1		
18	10	37612	SCREW (1-1/4")	2		
19	13	35048	LOCKWASHER	2		
18	10	34353	SCREW (1")	1		
19	12	46132	WASHER	1		
20	10	56743	SCREW (3-1/8")	1		
21	12	34714	WASHER	1		
22	11	23161	NUT	1		